LONG SEAMS

COURSE	ORIENTATION	ORIENTATION
1 (TOP)	130°	310°
2	127°	307°
3	130°	310°

*VERT – TOP TO BOTTOM

Ship loose items:
(1 pc) Cone Roof
(6) Shim plate △1

NOTE:8
SPOT X-RAY PER API 650 FOR
M1 REPAD AT CIRC SEAM.

NOTE: WALL RING W/ AGITATOR PAD FLANGE WILL BE PROVIDED BY OTHERS.

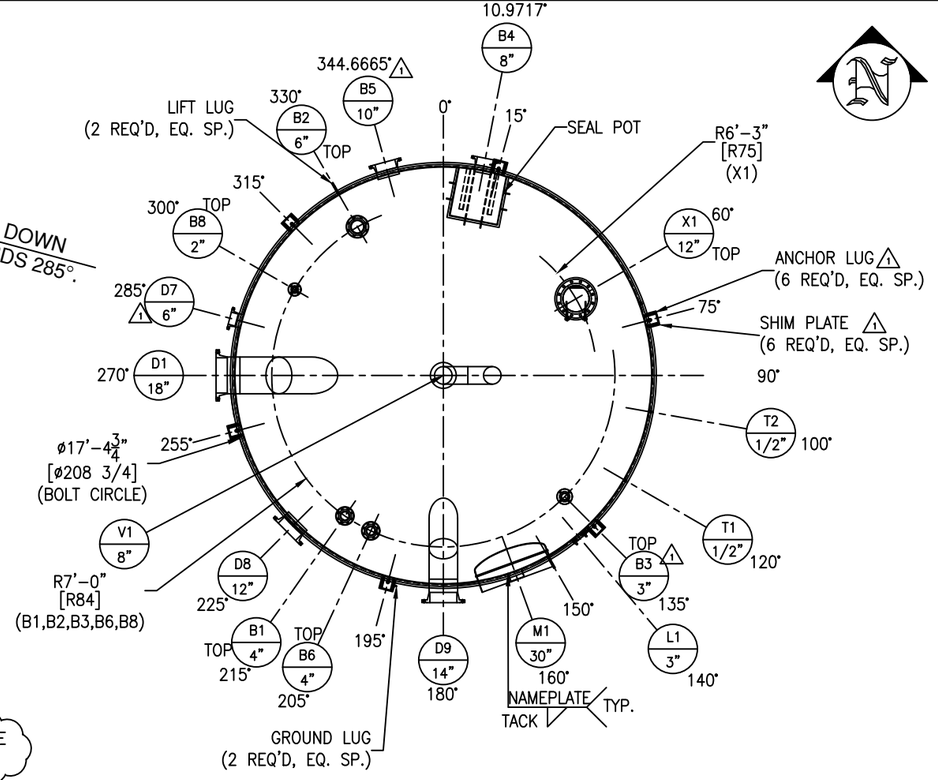

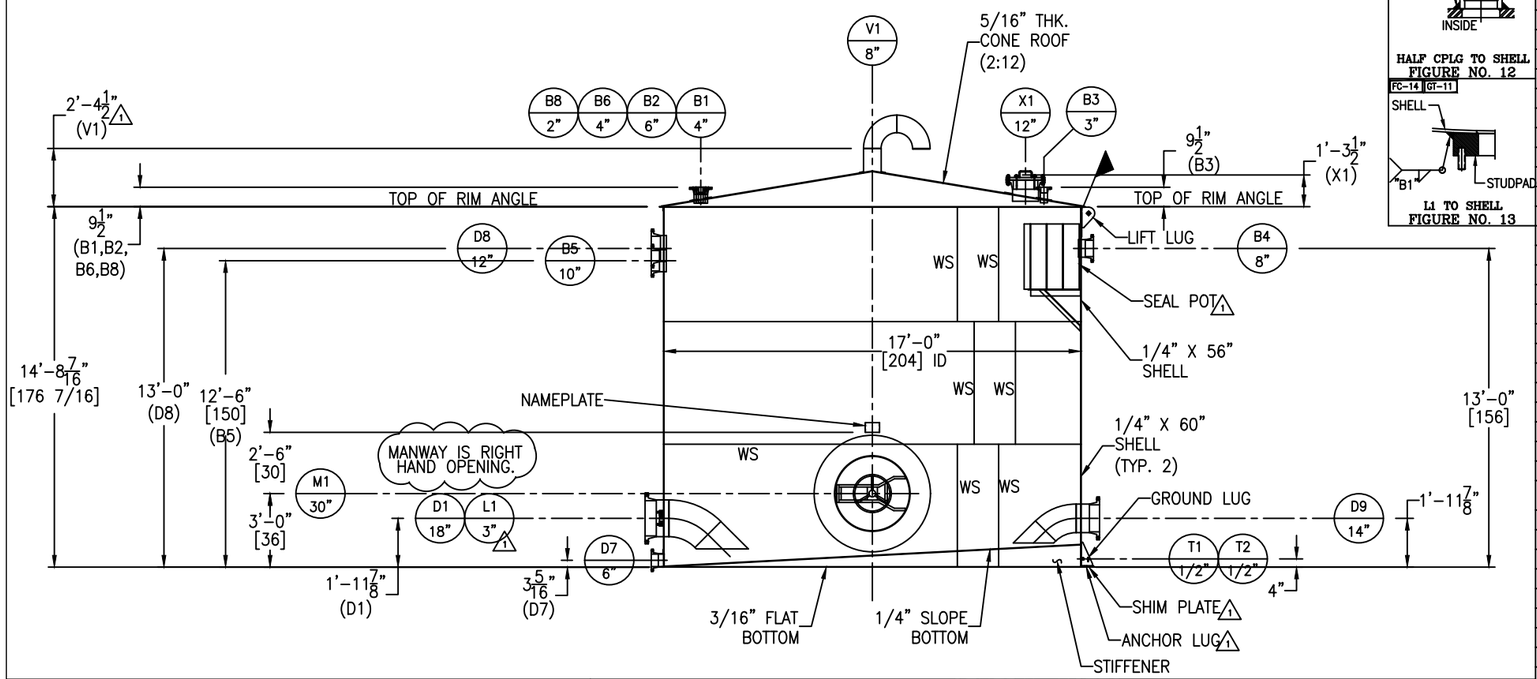

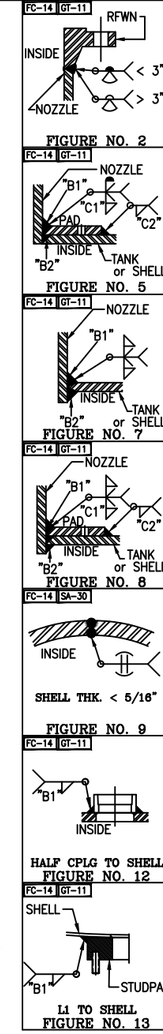

NOZZLE SCHEDULE

MARK	SERVICE	SIZE	RATING	TYPE / STYLE	NECK SCHED.	PROJECTION EXT. (℄)	PROJECTION INT. (MIN.)	WELD FIGURE	REPAD SIZE (WIDTH X THK.)	WELD SIZE "A1"	"A2"	"B1"	"B2"	"C1"	"C2"
B1	PROCESS INLET	4"	150#	RFWN	40S	SEE DWG	1"	2,8	2" X 5/16"	–	–	1/4	1/8	5/16	5/16
B2	PROCESS INLET	6"	150#	RFWN	40S	SEE DWG	1"	2,8	2" X 5/16"	–	–	1/4	1/8	5/16	5/16
B3	PROCESS INLET	3"	150#	RFWN	40S	SEE DWG	1"	2,8	2" X 5/16"	–	–	1/4	1/8	5/16	5/16
B4	PROCESS INLET	8"	150#	RFWN	40S	6"	1"	2,7	–	–	–	1/4	1/8	–	–
B5	CLEAR FILTRATE INLET	10"	150#	RFWN	40S	6"	1"	2,7	–	–	–	1/4	1/4	–	–
B6	PROCESS INLET	4"	150#	RFWN	40S	SEE DWG	1"	2,8	2" X 5/16"	–	–	1/4	1/8	5/16	5/16
B8	WATER SPRAY	2"	150#	RFWN	40S	SEE DWG	1"	2,8	2" X 5/16"	–	–	1/4	1/8	5/16	5/16
D1	PROCESS OUTLET	18"	150#	RFWN	10	9"	SEE DWG	2,7	–	–	–	1/4	1/4	–	–
D7	DRAIN	6"	150#	RFWN	40S	6"	–	2,5	2" X 1/4" SEE DWG	–	–	1/4	1/8	1/4	1/4
D8	OVERFLOW	12"	150#	RFWN	40S	6"	1"	2,7	–	–	–	1/4	1/4	–	–
D9	PROCESS OUTLET	14"	150#	RFWN	40S	9"	SEE DWG	2,7	–	–	–	1/4	1/4	–	–
L1	LEVEL	3"	–	SP. STUDPAD	–	–	–	13	–	–	–	1/4	1/4	–	–
M1	MANWAY	30"	–	CM-2	1/4"	4"	SEE DWG	8	10" X 1/4"	–	–	1/4	1/4	1/4	1/4
V1	VENT	8"	–	PIPE W/ ELBOWS	40S	SEE DWG	–	5	2" X 5/16"	–	–	1/4	1/8	5/16	5/16
X1	INSPECTION HATCH	12"	150#	RFWN W/ BLIND	40S	SEE DWG	1"	2,8	4" X 5/16"	–	–	1/4	1/8	5/16	5/16
T1	TEST COUPLING	1/2"	3000#	HALF THRD CPLG W/ PLUG	–	–	–	12	–	–	–	1/4	1/8	–	–
T2	TEST COUPLING	1/2"	3000#	HALF THRD CPLG W/ PLUG	–	–	–	12	–	–	–	1/4	1/8	–	–

MATERIALS OF CONSTRUCTION

	VESSEL
SHELL	SA240-316/316L
TOP CONE / SLOPE BOTTOM	SA240-316/316L
RIM ANGLE	SA479-316/316L
NOZZLE NECKS	SA312-316/316L WLD & SA403-316/316L WPB
NOZZLE FLANGES	SA182F-316/316L
MANWAY NECKS	SS316
MANWAY FLANGES	SS316
COUPLING/PLUG	SA182F-316/316L
SEAL POT	SA240-316/316L
SEAL POT STIFFENERS	SA479-316/316L
STUD PAD	SA240-316/316L OR SA182F-316/316L
MANWAY GASKETS	BUNA-N
NOZZLE GASKETS	GARLOCK 3000
BOLTS/STUDS (NOZZLE)	SA193-B8 (TEFLON COATED)
NUTS (NOZZLE)	SA194-8 (TEFLON COATED)
BOLTS/STUDS (STRUCTURE)	–
NUTS (STRUCTURE)	–
FLAT BOTTOM	SA240-304/304L
SUPPORTS/HOLD DOWNS	SA240-304/304L
LIFTING / TAILING LUGS	SA240-304/304L
GROUND LUG	SA240-304/304L
SLOPE BOTTOM STIFFENERS	SA240-304/304L
REPADS	SA240-304/304L
SHIM PLATES △1	SA240-304/304L
PLATFORM CLIPS	–
DIPTUBE SUPPORT	–
JACKET HEADS	–
JACKET NOZZLE NECKS	–
JACKET NOZZLE FLANGES	–

DESIGN DATA

	VESSEL
DESIGN AND FAB. CODE	API650
CERT. STAMP REQ'D.	NO
DESIGN PRESSURE	ATM
DESIGN TEMPERATURE	194° F
MIN. DESIGN METAL TEMP.	-20° F @ ATM
OPERATING PRESSURE	△1 ATM
OPERATING TEMPERATURE	△1 119 ° F
JOINT EFFICIENCY HEADS	0.70
JOINT EFFICIENCY SHELL	0.70
CORROSION ALLOWANCE	0"
SPECIFIC GRAVITY	1.0
EARTHQUAKE ZONE	Ss = (0.526) S1 = (0.23)
WIND LOAD	99 MPH
STRESS RELIEF	NOT REQ'D
RADIOGRAPHIC EXAM	SEE NOTE 8
DYE PENETRANT EXAM	SEE NOTE 7
MAGNETIC PARTICLE EXAM	NOT REQ'D
VACUUM BOX TEST	SEE NOTE 9
PNEUMATIC TEST (FALSE BTM)	2 PSIG/ GAUGE #1
JKT DESIGN AND FAB. CODE	–
JKT CERT. STAMP REQ'D.	–
JKT DESIGN PRESSURE	–
JKT DESIGN TEMPERATURE	–
JKT MIN. DESIGN METAL TEMP.	–
JKT OPERATING PRESSURE	–
JKT OPERATING TEMPERATURE	–
JKT JOINT EFFICIENCY HEADS	–
JKT JOINT EFFICIENCY SHELL	–
JKT HYDRO TEST	–

VESSEL FINISH

INTERIOR WELD TREATMENT:	SAV TANK STANDARD
EXTERIOR WELD TREATMENT:	SAV TANK STANDARD
SAV TANK FINISHING STANDARD:	SEE NOTE 6
INSULATION:	N/A
PAINTING:	N/A

VESSEL CAPACITY AND WEIGHTS

OPERATING CAPACITY	17,818 GAL.
FULL CAPACITY	24,900 GAL.
EMPTY SHIPPING WEIGHT	21,500 LBS.
WEIGHT FULL OF WATER	229,800 LBS.
WEIGHT FULL OF PRODUCT	229,800 LBS.

QUALITY CONTROL

ENG. _____ DATE: _____

Q.C. _____ DATE: _____

This drawing is issued for customer approval. please review, make approval changes (if any) in red. check the appropriate box, sign & date.

- ☐ Approval – no changes. Please proceed with fabrication.
- ☐ Approved as noted. Please proceed with fabrication
- ☐ Not approved. Please make changes and resubmit.

Customer signature _____ Date _____

GENERAL NOTES

1.) COVER ALL FLANGES, OPENINGS & MACHINED SURFACES PRIOR TO SHIPMENT UNLESS OTHERWISE NOTED.
2.) BOLT HOLES TO STRADDLE 0° & 180° UNLESS OTHERWISE NOTED.
3.) NOZZLE REPADS TO HAVE (1) ø1/4" TELL-TALE HOLES ON HORIZONTAL CENTER LINE.
ALL OTHER REPADS TO HAVE (1) ø1/4" WEEP HOLE AT LOWEST POINT ON PAD.
4.) MANUFACTURING TOLERANCE TO BE IN ACCORDANCE WITH API STANDARD 650 7.5.
5.) ASME MATERIALS TO CONFORM TO THE FOLLOWING: FLANGES – B16.5, FITTINGS – B16.9 & COUPLINGS – B16.11.
6.) PICKLE ALL EXTERIOR WELDS. PASSIVATE INTERIOR & EXTERIOR OF VESSEL.
7.) DYE PEN – DYE PEN TO BE DONE ON ALL NOZZLES.
8.) X-RAY: SPOT X-RAY PER API 650 FOR M1 REPAD AT CIRC SEAM.
9.) VACUUM BOX TEST: ALL CIRC. SEAMS, LONG SEAMS & ROOF SEAMS

△1 REVISIONS

REV	D.BY	C.BY	DATE	DESCRIPTION
2				AS BUILT
1	RS	NP	6/3/25	CERTIFIED
0	RS	AD	2/3/25	APPROVAL

Savannah Tank & Equipment Corp.
1517 Telfair Road, Savannah, GA 31415
(912) 233-8902

DRAWN BY: RS
CHK'D BY: AD
APPROVED BY: NP
SCALE: 1/4" = 1'-0"

KIMBERLY CLARK
CLOUDY FILTRATE TANK
EQUIP. # 360-TK-36102
CUST. PO #C000139275

DRAWING NO.: 020-25-1 SHT 1 OF 5 REV. SET 1

FC-14

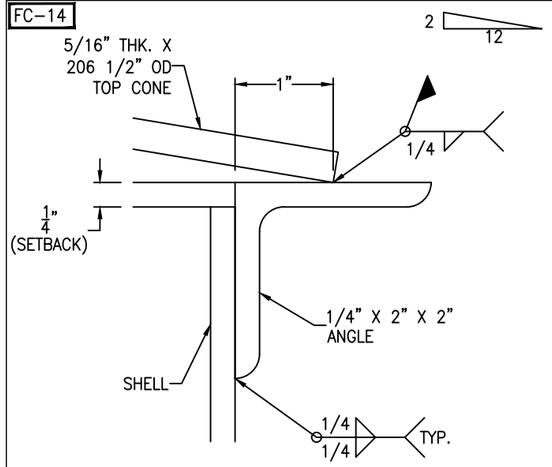

RIM ANGLE DETAIL

SCALE: 1'-0" = 1'-0"

FC-14

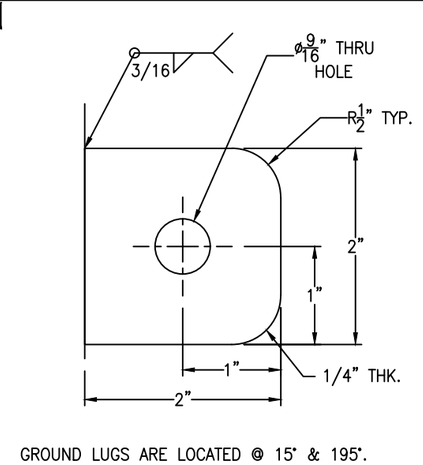

GROUND LUG DETAIL

(2 REQ'D) SCALE: 1'-0" = 1'-0"

FC-14

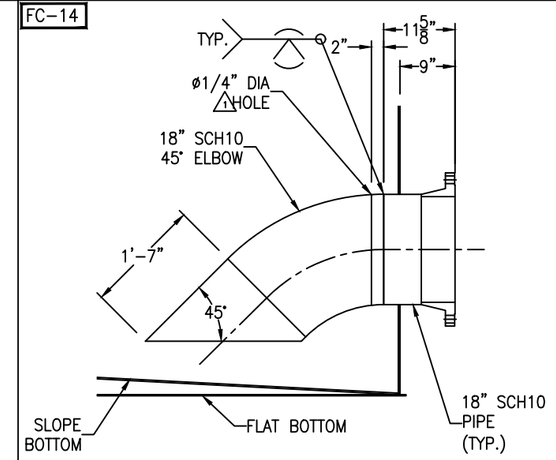

NOZZLE D1 DETAIL

SCALE: 3/4" = 1'-0"

FC-14

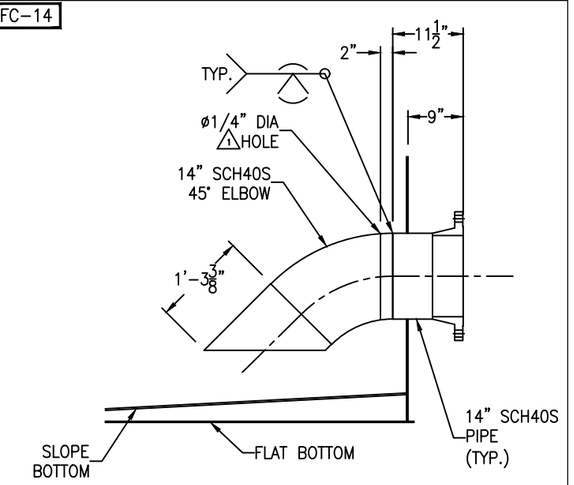

NOZZLE D9 DETAIL

SCALE: 3/4" = 1'-0"

FC-14

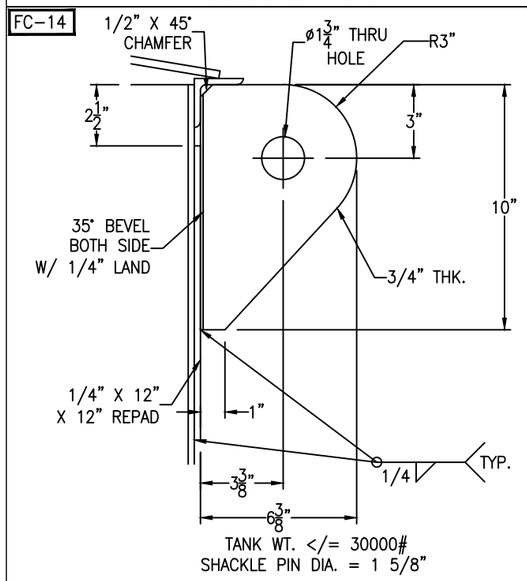

LIFT LUG DETAIL

(2 REQ'D) SCALE: 3" = 1'-0"

FC-14

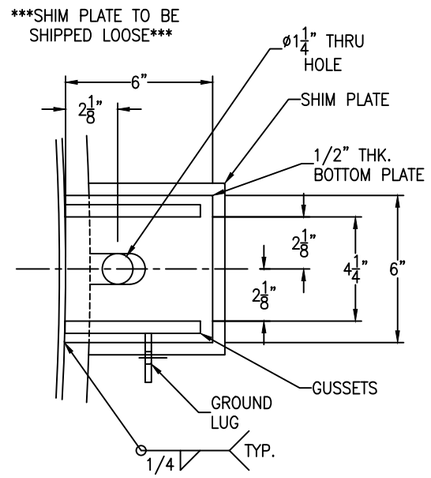

FC-14

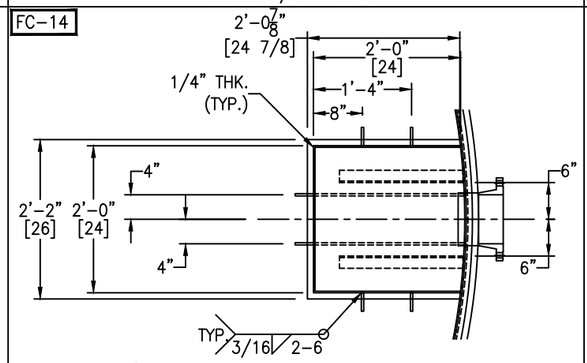

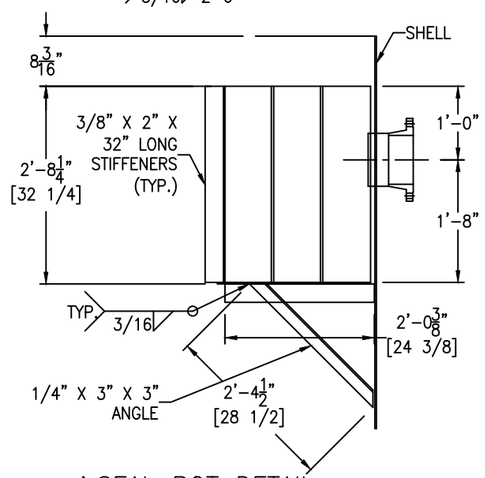

⚠SEAL POT DETAIL

SCALE: 3/4" = 1'-0"

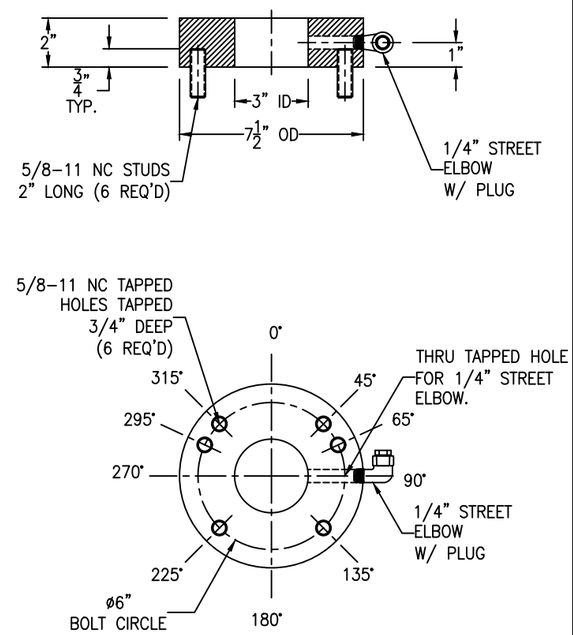

SPECIAL STUDPAD DETAIL

(1 REQ'D) SCALE: 3" = 1'-0"

FC-14

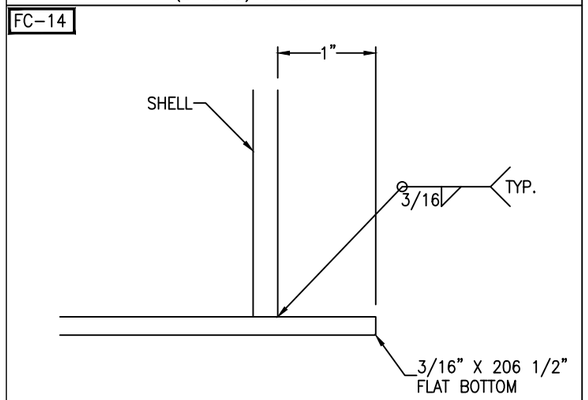

FLAT BOTTOM DETAIL

SCALE: 1'-0" = 1'-0"

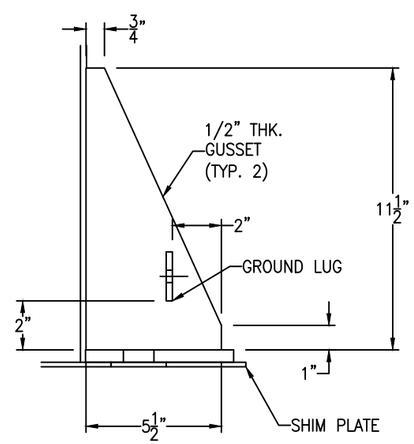

⚠ANCHOR LUG DETAIL

(6 REQ'D) SCALE: 3" = 1'-0"

Bolting for blinds
B1a, B6a: (8+8) 3/4"-10 NC x 3 1/2" HH BOLT
(8+8) 3/4"-10 NC HH NUT
(1+1) 6" 150# RING GASKET
B2a: (8) 3/4"-10 NC x 3 1/2" HH BOLT
(8) 3/4"-10 NC HH NUT
(1) 8" 150# RING GASKET
B3a: (8) 5/8"-11 NC x 3" HH BOLT
(8)5/8"-11 NC HH NUT
(1) 4" 150# RING GASKET

REV	D.BY	C.BY	DATE	DESCRIPTION
2				AS BUILT
1	RS	NP	6/3/25	CERTIFIED
0	RS	AD	2/3/25	APPROVAL

⚠ REVISIONS

Savannah Tank & Equipment Corp.
1517 Telfair Road, Savannah, GA 31415
(912) 233-8902

DRAWN BY: RS
CHK'D BY: AD
APPROVED BY: NP
SCALE: 1/4" = 1'-0"

KIMBERLY CLARK
CLOUDY FILTRATE TANK
EQUIP. # 360-TK-36102
CUST. PO #C000139275

DRAWING NO.: 020-25-2 SHT 2 OF 5 REV. SET 1

*NOTCH PIPE.

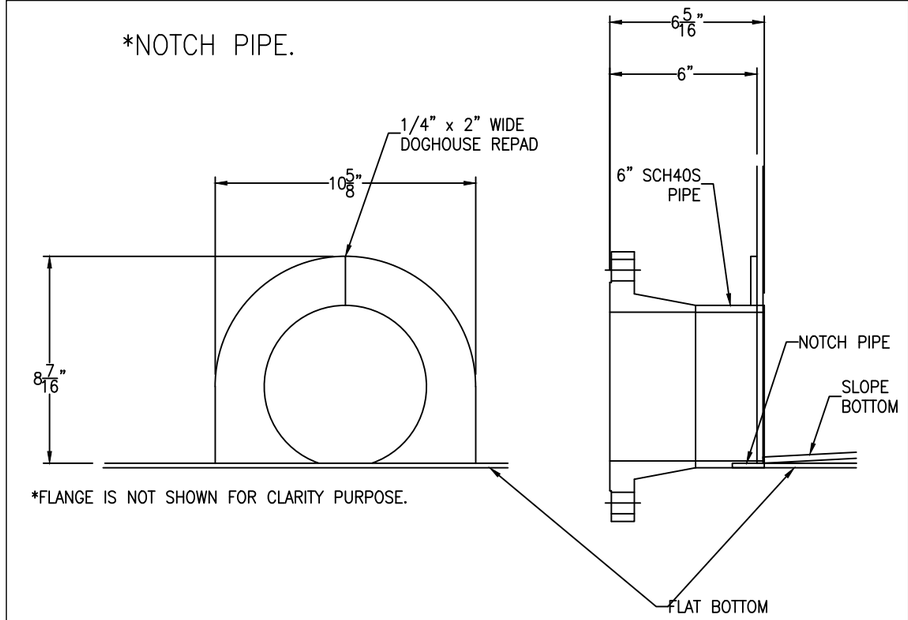

*FLANGE IS NOT SHOWN FOR CLARITY PURPOSE.

NOZ. D2 DETAIL

SCALE: 3" = 1'-0"

FC-14

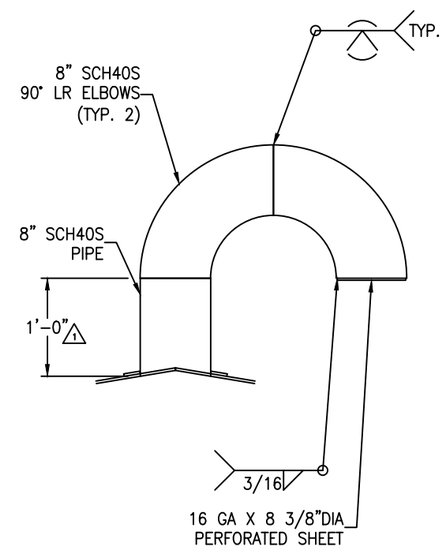

NOZ. V1 DETAIL

SCALE: 1" = 1'-0"

***SHIM PLATE TO BE
SHIPPED LOOSE***

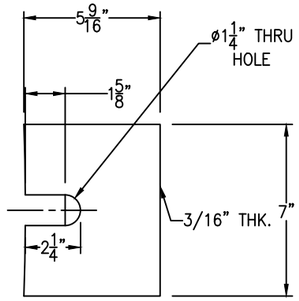

1 SHIM PLATE DETAIL

(6 REQ'D) SCALE: 3" = 1'-0"

REV	D.BY	C.BY	DATE	DESCRIPTION
2				AS BUILT
1	RS	NP	6/3/25	CERTIFIED
0	RS	AD	2/3/25	APPROVAL

1 REVISIONS

Savannah Tank & Equipment Corp.
1517 Telfair Road, Savannah, GA 31415
(912) 233-8902

DRAWN BY: RS
CHK'D BY: AD
APPROVED BY: NP
SCALE: 1/4" = 1'-0"

KIMBERLY CLARK
CLOUDY FILTRATE TANK
EQUIP. # 360-TK-36102
CUST. PO #C000139275

DRAWING NO.: 020-25-3 SHT 3 OF 5 REV. SET 1

FC-14

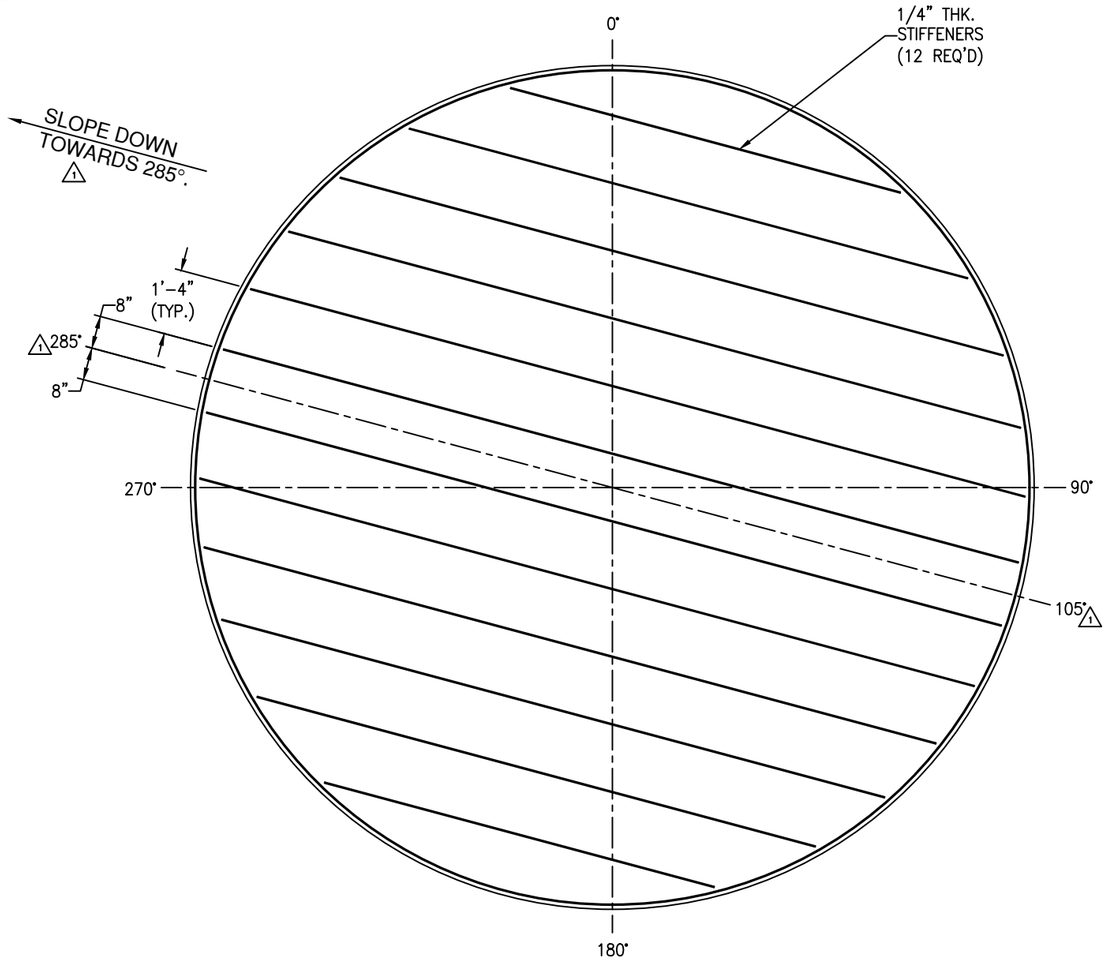

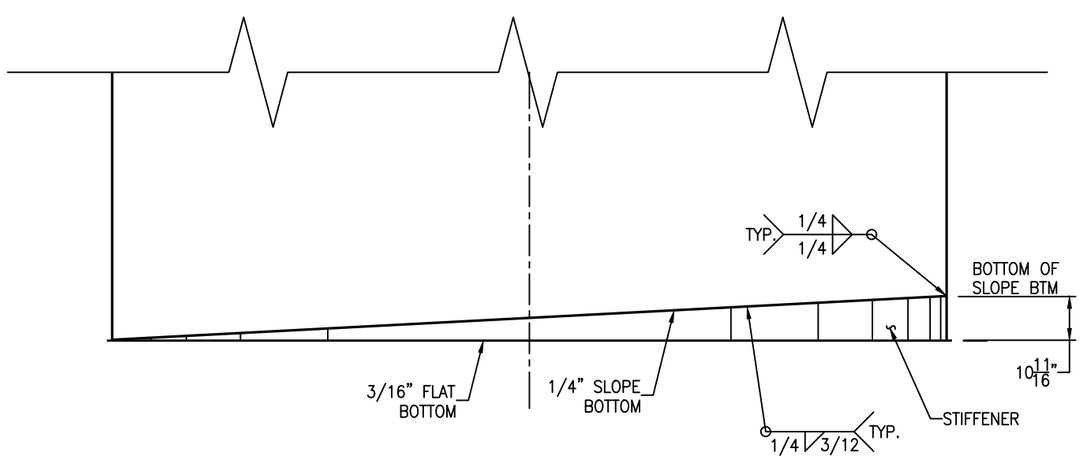

SLOPE BOTTOM DETAIL

SCALE: 1/2" = 1'-0"

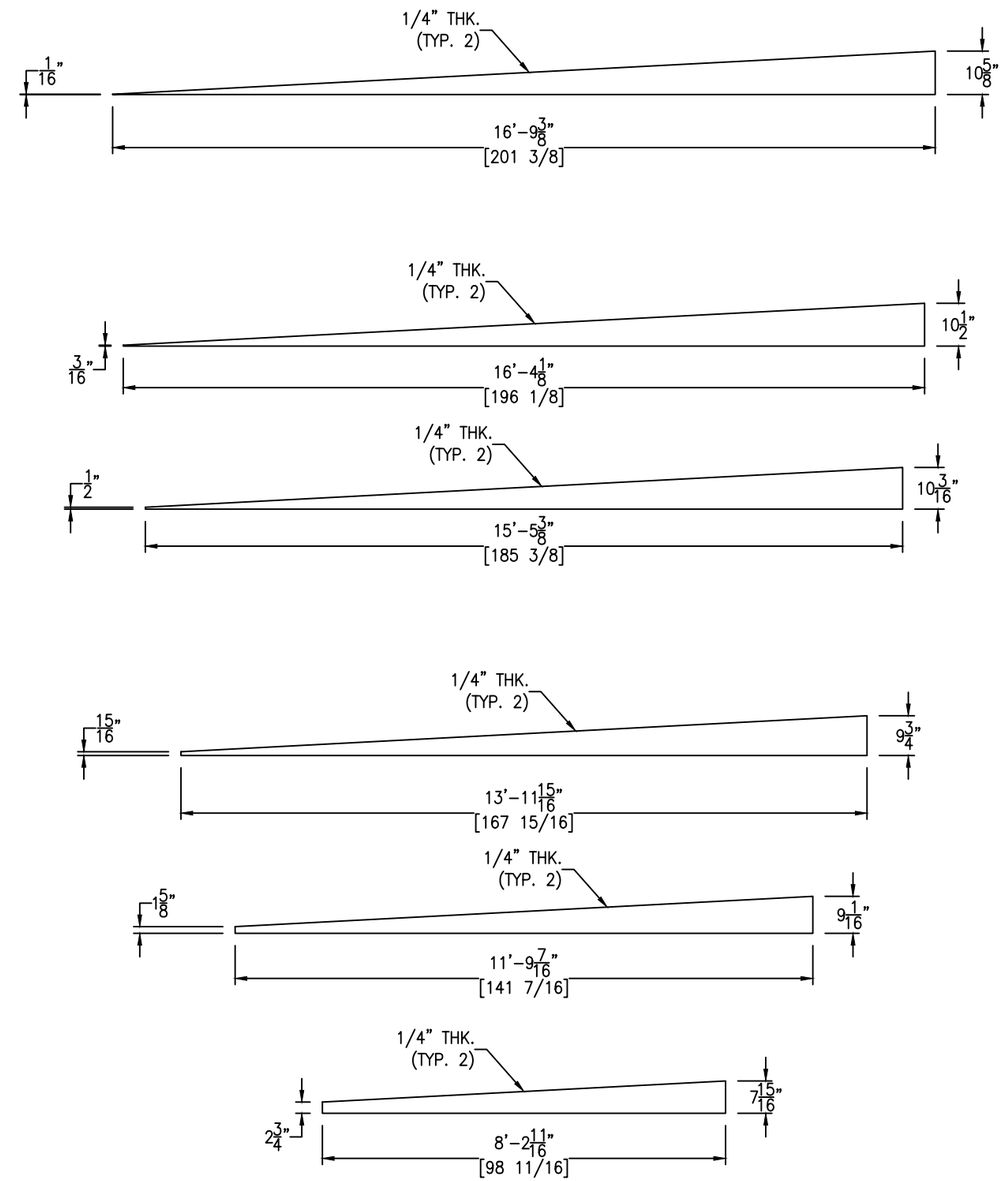

STIFFENERS DETAIL

SCALE: 1/2" = 1'-0"

REV	D.BY	C.BY	DATE	DESCRIPTION
2				AS BUILT
1	RS	NP	6/3/25	CERTIFIED
0	RS	AD	2/3/25	APPROVAL

1 REVISIONS

Savannah Tank & Equipment Corp.
1517 Telfair Road, Savannah, GA 31415
(912) 233-8902

DRAWN BY: RS
CHK'D BY: AD
APPROVED BY: NP
SCALE: 1/4" = 1'-0"

KIMBERLY CLARK
CLOUDY FILTRATE TANK
EQUIP. # 360-TK-36102
CUST. PO #C000139275

DRAWING NO.: 020-25-4 SHT 4 OF 5 REV. SET 1

FC-14

Bolting for blinds
X1: (12) 7/8-9 NC x 5" FULL THREADED STUD
(24) 7/8-9 NC HH NUT
(1) 12" 150# RING GASKET X 1/8" THK
(48) BELLEVILLE WASHERS (17-7 STAINLESS STEEL)

Bolting for hinge
(2) 1/2-13 NC x 1 1/2" HH BOLT
(2) 1/2-13 NC HH NUT

*NOTE: SEE VESSEL ORIENTATION FOR HINGE LOCATION

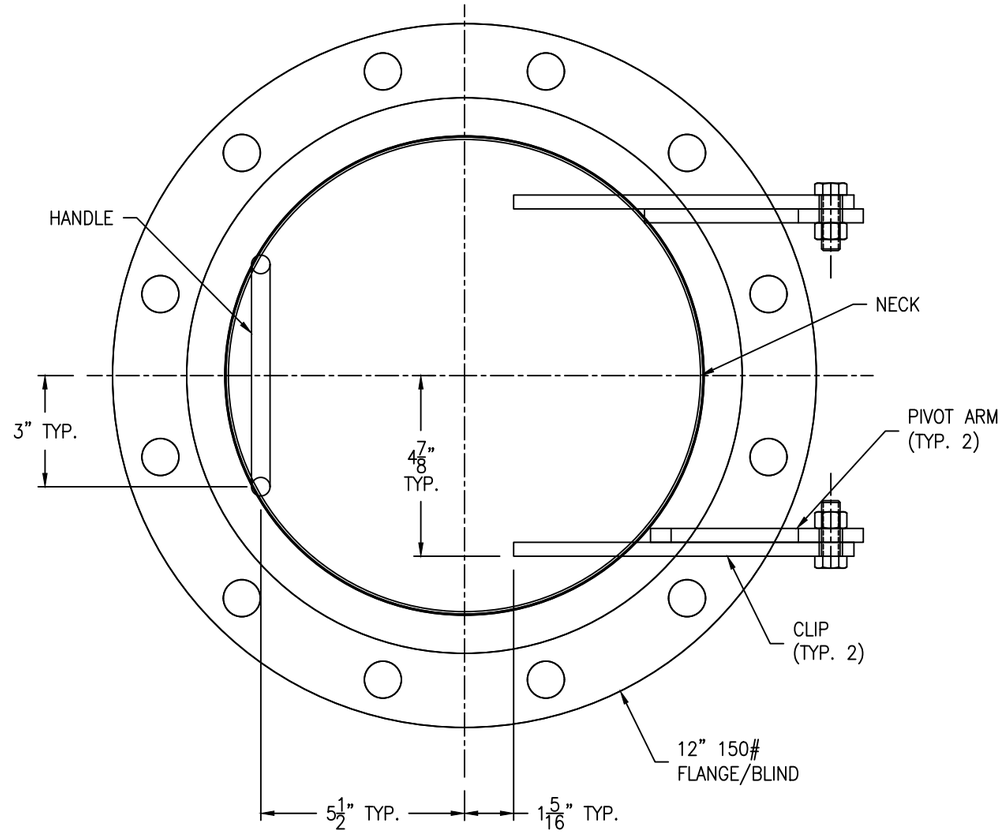

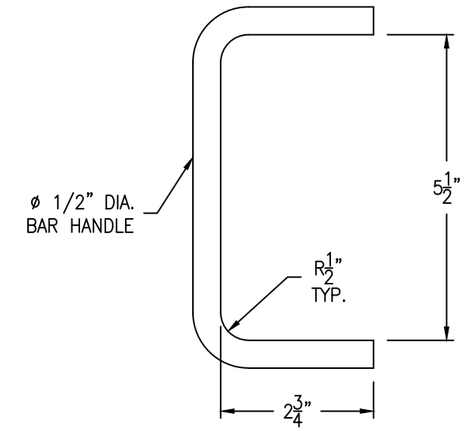

HANDLE DETAIL

(1 REQ'D) SCALE: 6" = 1'-0"

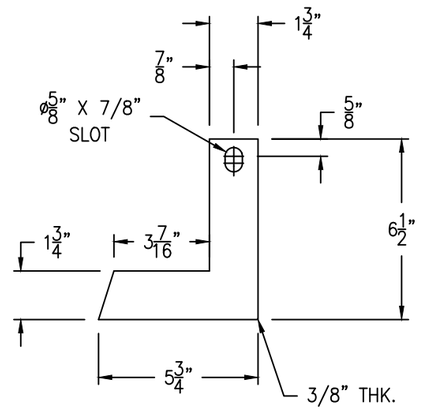

PIVOT ARM DETAIL

(2 REQ'D) SCALE: 3" = 1'-0"

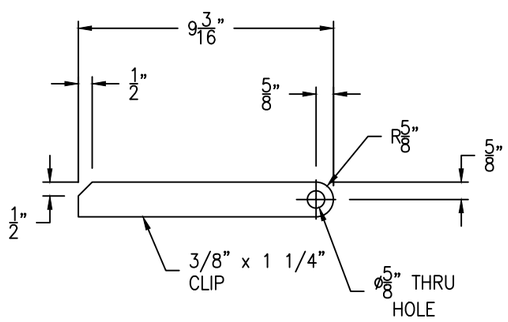

CLIP DETAIL

(2 REQ'D) SCALE: 3" = 1'-0"

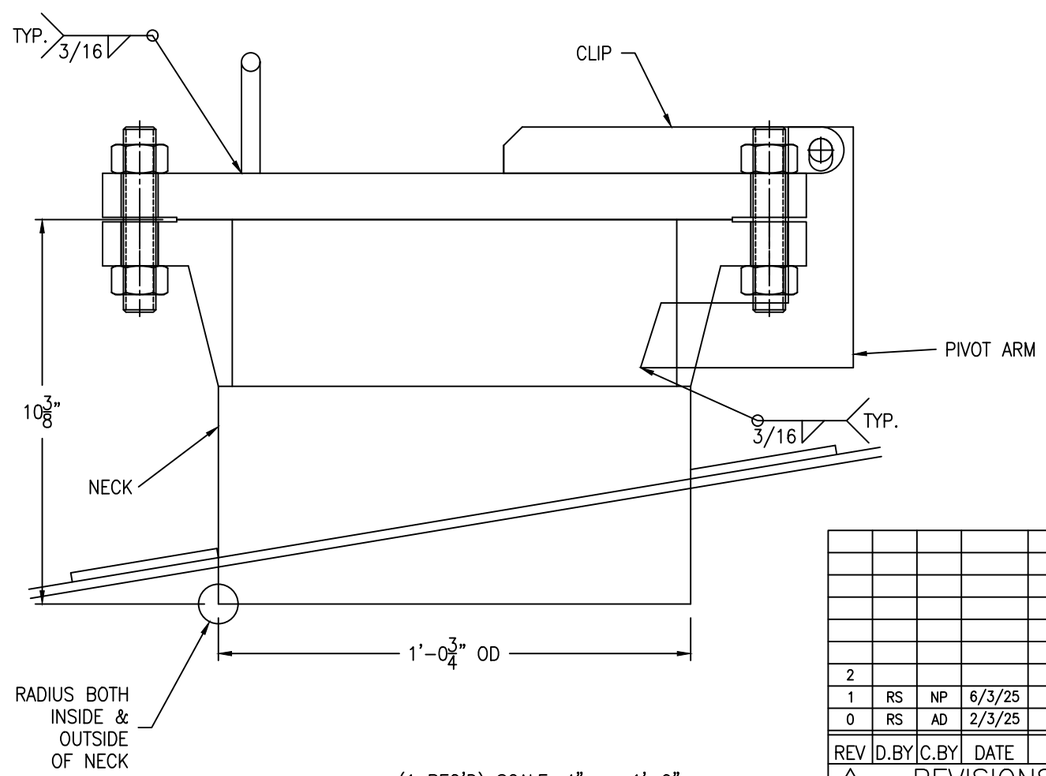

(1 REQ'D) SCALE: 4" = 1'-0"

REV	D.BY	C.BY	DATE	DESCRIPTION
2				AS BUILT
1	RS	NP	6/3/25	CERTIFIED
0	RS	AD	2/3/25	APPROVAL

⚠ REVISIONS

Savannah Tank & Equipment Corp.
1517 Telfair Road, Savannah, GA 31415
(912) 233-8902

DRAWN BY:	RS
CHK'D BY:	AD
APPROVED BY:	NP
SCALE:	2" = 1'-0"

KIMBERLY CLARK
CLOUDY FILTRATE TANK
EQUIP. # 360-TK-36102
CUST. PO #C000139275

DRAWING NO.: 020-25-5 SHT 5 OF 5 REV. SET 1